TOTO 3-Hole Deck-Mounted Bathtub Mixer

DB356C

DB356C

FEATURES

•Simple clean design with vertical and horizontal lines.
•Harmonized with the room of floor, wall and ceiling
•Unique rectifying water offers a comfortable experience with smooth water flow which maintains the strength while keeps soft touch with a low consumption.

DB356C 3-Hole Deck-Mounted Bathtub Mixer

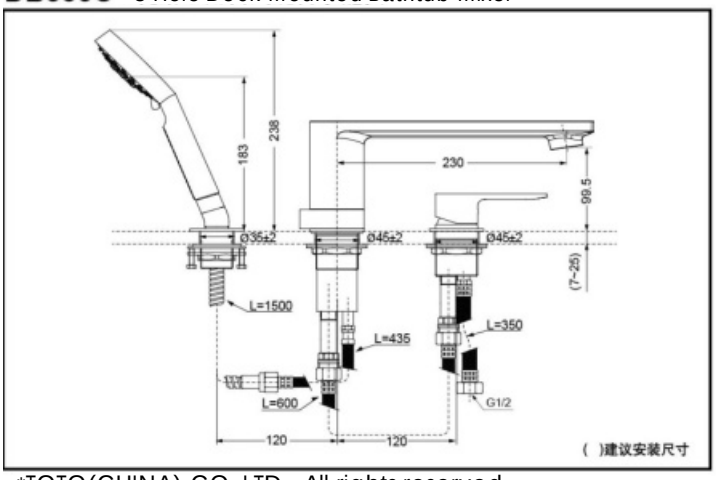

*TOTO(CHINA) CO.,LTD. All rights reserved.

SPECIFICS

Water Supply:
0.05MPa(dynamic pressure)～0.75MPa(static pressure)

OTHERS

Series: CI Contemporary Series